WILCO CONSTRUCTION - STAMP RESIDENCE

HEAVY TIMBER TRUSS

NOTES

1. TIMBERS ARE DOUGLAS FIR SS, S4S, SUPPLIED BY CONTRACTOR
   - 6 1/4" X 10 1/4" – TOP & BOTTOM CHORDS
   - 6 1/4" X 8 1/4" – KINGPOST
   - 5 1/4" X 8 1/4" – WEBS
2. BOLTS ARE 3/4"ø A307 STEEL, COUNTERSUNK 1" & COVERED WITH DECORATIVE WOOD PLUGS
3. BOLT HOLES ARE 7/8" ALLOWING 1/8" FIT TOLERANCE, UNO
4. CONNECTION PLATES ARE 3/8" – A36 STEEL PLATE KERF CUT INTO TIMBERS
5. WEBS ARE NON-STRUCTURAL MEMBERS SET IN 1/2" FROM OUTSIDE FACE OF TOP & BOTTOM CHORDS & SECURED WITH CONCEALED LAGBOLTS

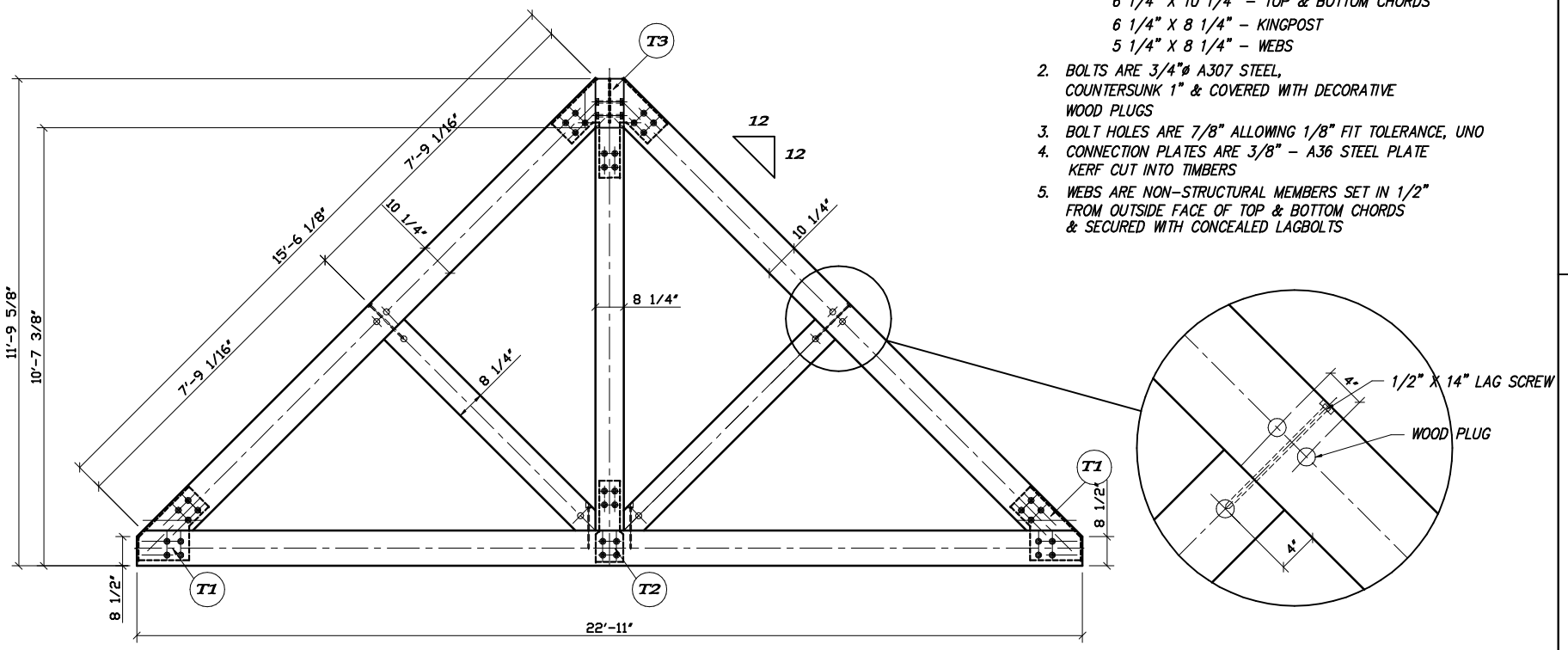

TIMBER TRUSS ELEVATION
1/4" = 1'

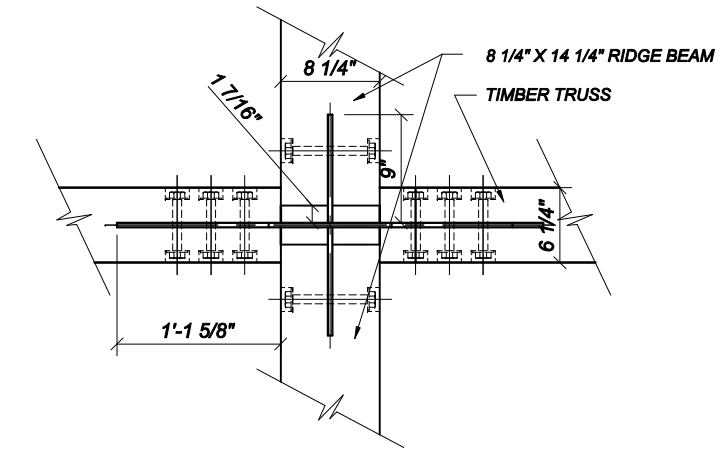

T3 PLATE T3 - TOP VIEW
3/4" = 1' FOR DETAILS SEE S5

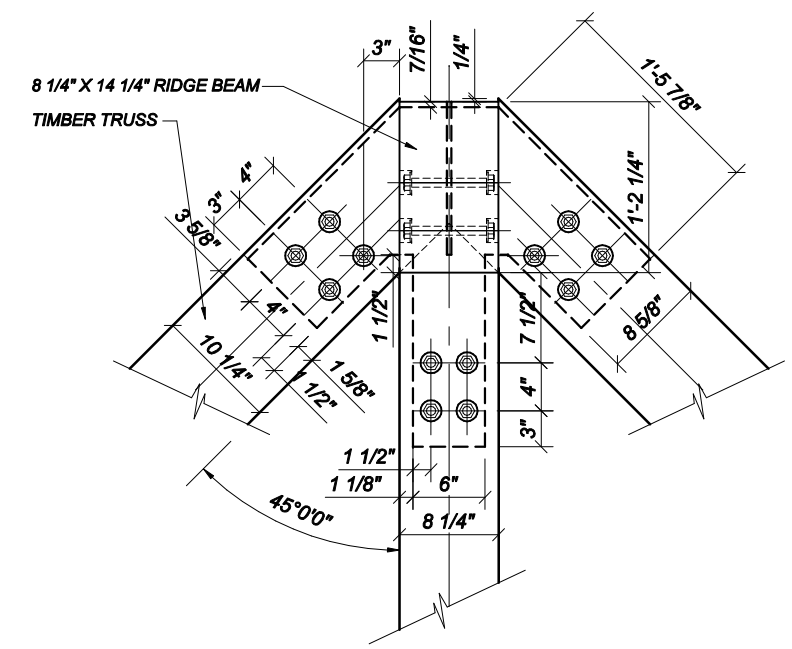

T3 PLATE T3 - TRUSS / FRONT VIEW
3/4" = 1' FOR DETAILS SEE S5

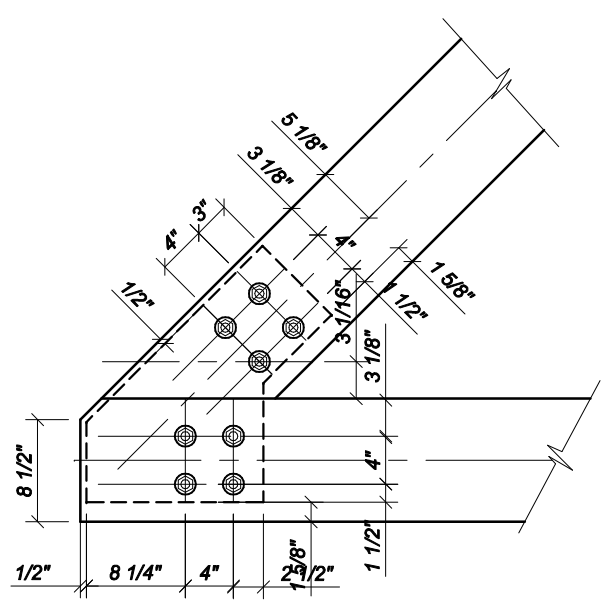

T1 PLATE T1
3/4" = 1' FOR DETAILS SEE S5

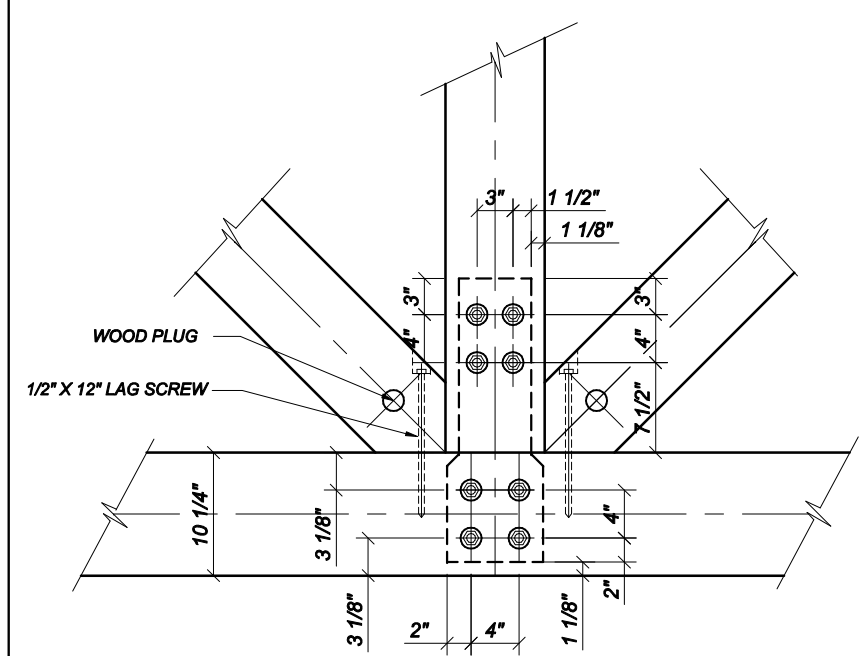

T2 PLATE T2
3/4" = 1' FOR DETAILS SEE S5

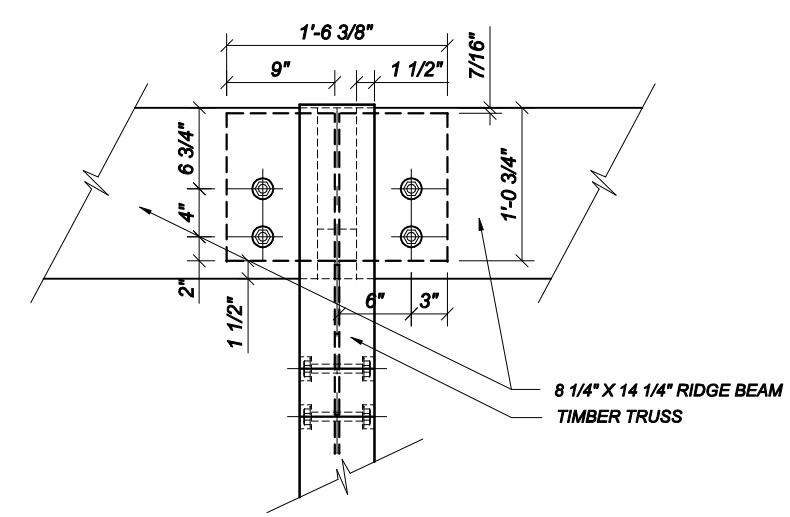

T3 PLATE T3 - BEAM/ SIDE VIEW
3/4" = 1' FOR DETAILS SEE S5

No.	REVISIONS	DATE

PACIFIC TRUSS
P.O. Box 70,
Trans Canada Hwy.,
Cobble Hill, B.C.
V0R 1L0

Tel: (250) 743-5584
383-4737 (Victoria)
669-5186 (Vancouver)
245-5021 (Nanaimo)
Toll Free: 1-800-667-3511

PROJECT/RESIDENCE:
WILCO
STAMP RESIDENCE
LIVING ROOM TIMBER TRUSSES
SALTSPRING ISLAND

DWG. TITLE:	HEAVY TIMBER TRUSS
DESIGNER:	CC
DRAWN BY:	CC
DATE:	FEB 9, 2006
SCALE:	AS NOTED
LOADING (PSF): Floor L.L. Floor D.L. Roof L.L. Roof D.L.	
PERMIT #	
SALES REP:	PHIL C.
TRUSTRAK#	Q06Z363B

JOB No.	DRAWING No.	REV.
PT1205	S1	