KOBAYASHI - OCEAN POINTE SCHOOL

BHT-1 & BHT-2 HEAVY TIMBER TRUSSES

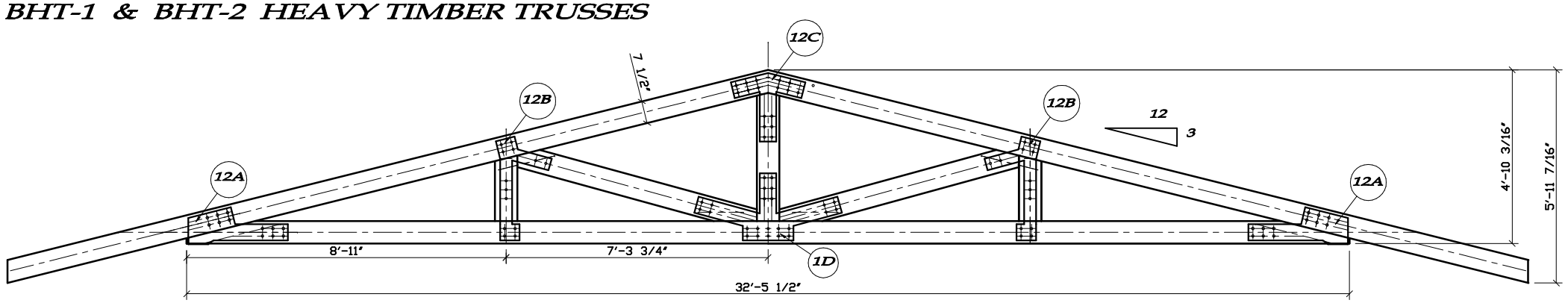

BHT-1 COMMON TRUSS ELEVATION

1/4" = 1'

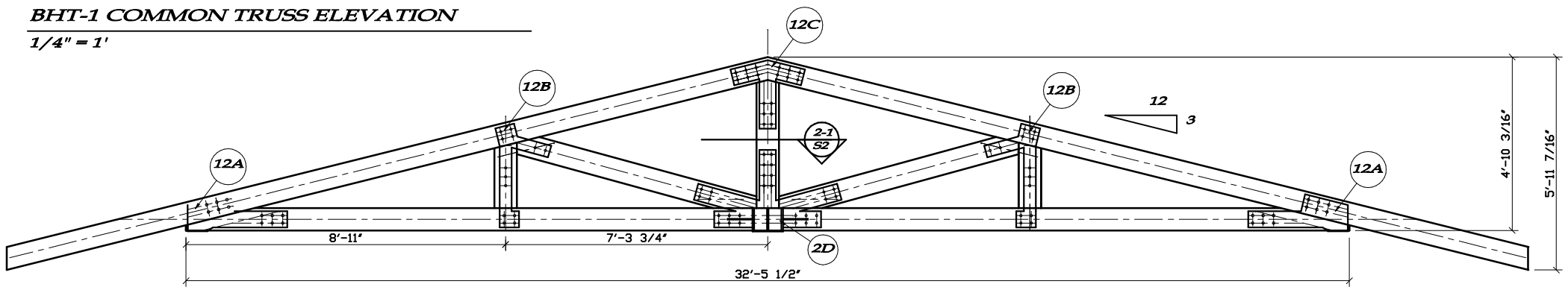

BHT-2 GIRDERTRUSS ELEVATION

1/4" = 1'

NOTES

1. TIMBERS ARE 5 1/2" X 7 1/2" DOUGLAS FIR SS, S4S, FOHC, KILN-DRIED, FORMOSAN INSECT TREATED
2. BOLTS ARE 7" X 3/4"ø A307 STEEL, HDG – TYPICAL WITH THE EXCEPTION OF 7 1/2" THRU HANGER ONLY
3. BOLT HOLES ARE 7/8"ø ALLOWING 1/8" TOLERANCE– TYPICAL WITH THE EXCEPTION OF 1"ø THRU HANGER ONLY
4. CONNECTION PLATES ARE A36 STEEL PLATE, HDG
   1/4" – 12B, 12C
   3/8" – 12A, 1D, 2D-1, 2D-2
5. PLATES ARE MOUNTED ON THE EXTERIOR OF BOTH SIDES OF THE TRUSS EXCEPT PLATE 12A WHICH HAS BOTH SIDE PLATES CONNECTED AT THE BEARING PLATE
6. HANGER ON PLATE 2D-2 IS FIELD BOLTED THROUGH BHT-3 CONNECTOR PLATES AND BHT-3 BOTTOM CHORD TIMBER
7. RESTRAIN TOP CHORDS OF HIP TRUSSES BHT-3 TO GIRDER BHT-2 . SEE SHEET S3, NOTE 8.

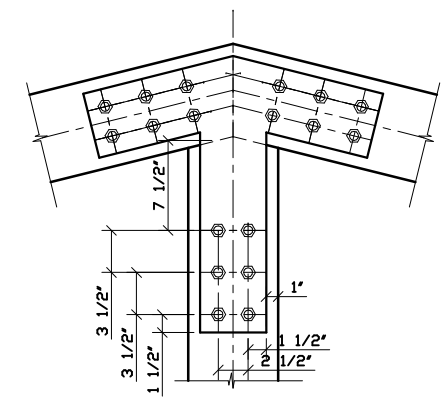

12C PLATE 12C
3/4" = 1'

No.	REVISIONS	DATE
1	bearing plate revision	10/13/05

PACIFIC TRUSS
P.O. Box 70,
Trans Canada Hwy.,
Cobble Hill, B.C.
V0R 1L0

Tel: (250) 743-5584
383-4737 (Victoria)
669-5186 (Vancouver)
245-5021 (Nanaimo)
Toll Free: 1-800-667-3511

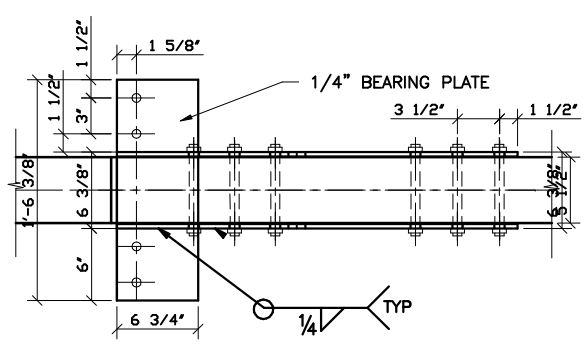

12A PLATE 12A - top view
3/4" = 1'

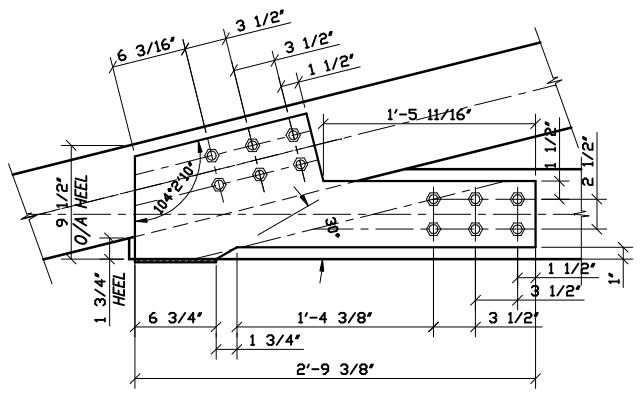

12A PLATE 12A with bearing plate
3/4" = 1'

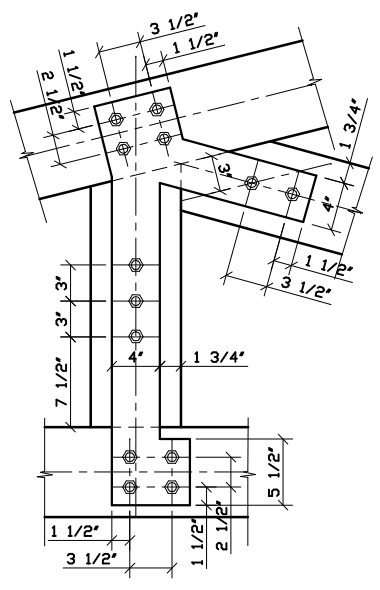

12B PLATE 12B
3/4" = 1'

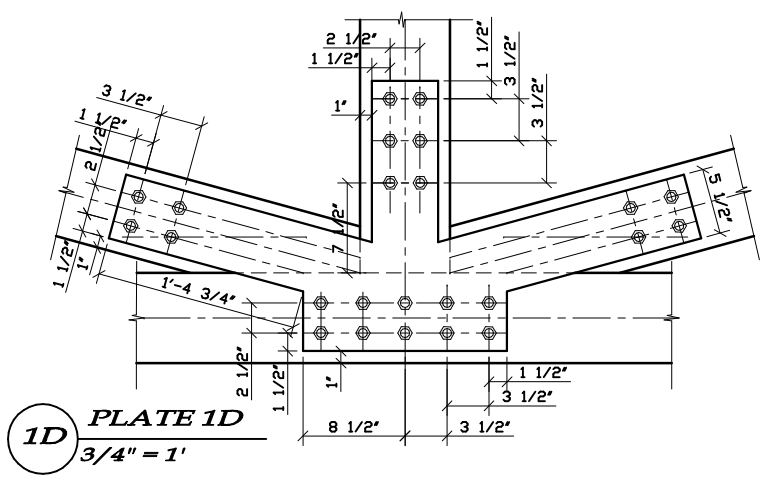

1D PLATE 1D
3/4" = 1'

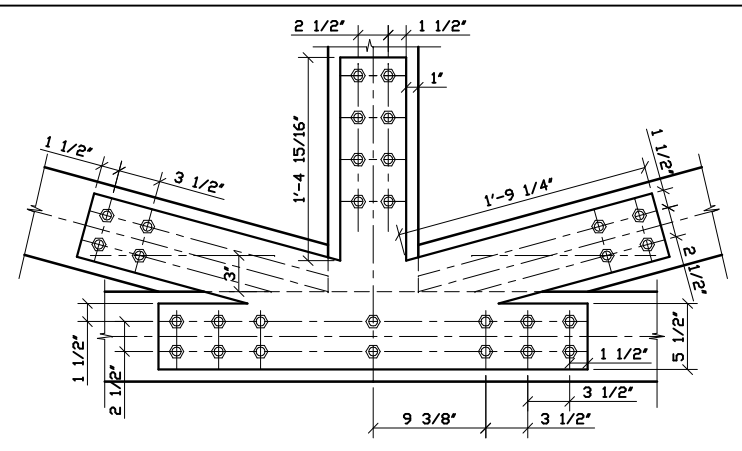

2D PLATE 2D-1 without hanger
3/4" = 1'

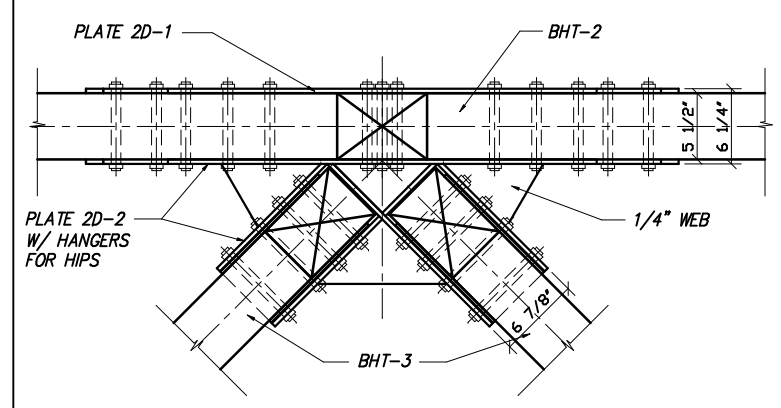

2-1 S2 PLATES 2D-1 & 2D-2 - TOP VIEW
3/4" = 1'
FOR DETAILS SEE SD1

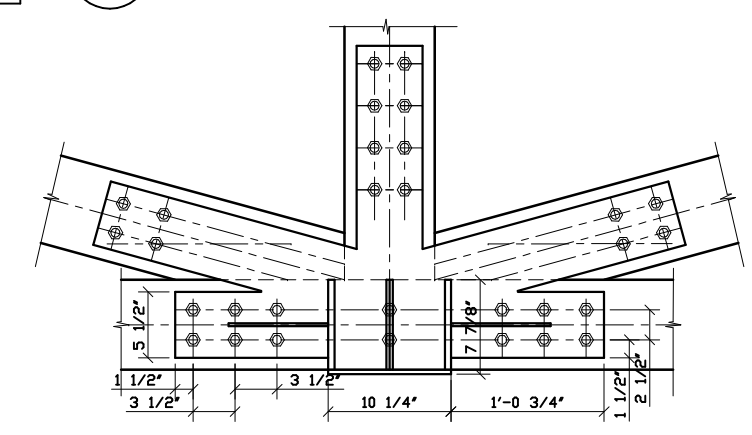

2D PLATE 2D-2 with hanger
3/4" = 1'

PROJECT/RESIDENCE:
KOBAYASHI
OCEAN POINTE ELEMENTARY SCHOOL
BLDG B – LIBRARY
EWA BEACH, OAHU, HAWAII

DWG. TITLE: HEAVY TIMBER COMMON & GIRDER TRUSSES
DESIGNER: CC
DRAWN BY: CC
DATE: AUG 17, 2005
SCALE: AS NOTED
LOADING (PSF): Floor L.L. Floor D.L. Roof L.L. Roof D.L.
PERMIT #
SALES REP: PHIL C.
TRUSTRAK# J06Z319A

JOB No.	DRAWING No.	REV.
	S2	